ORTAL
YOUR LIFE. YOUR FIRE

200 TS
Default

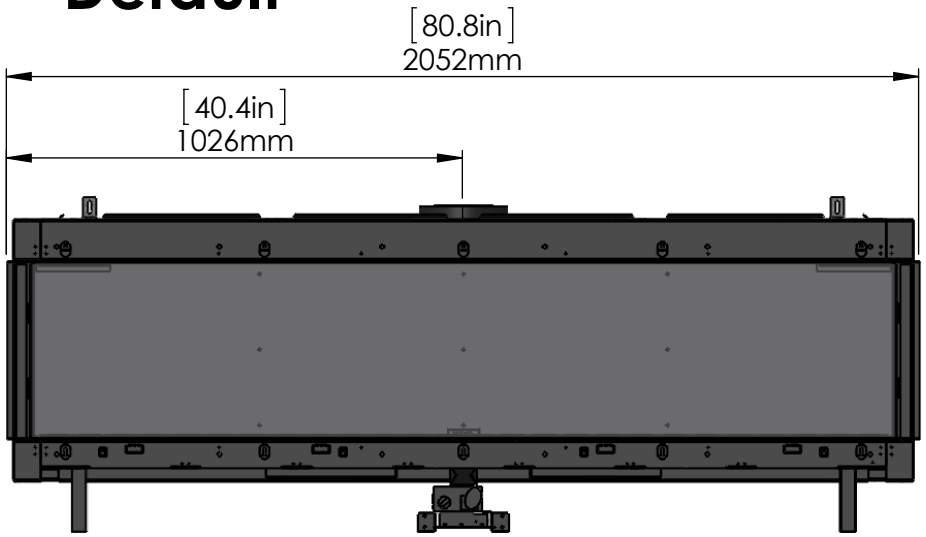

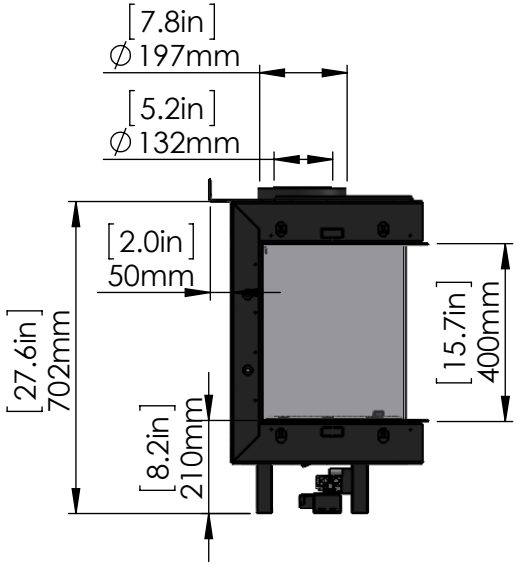

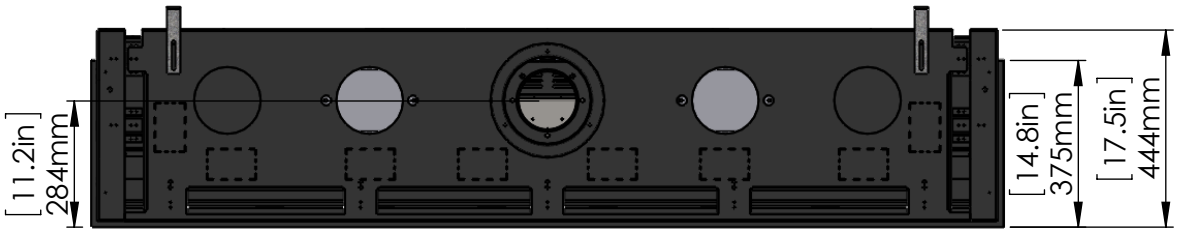

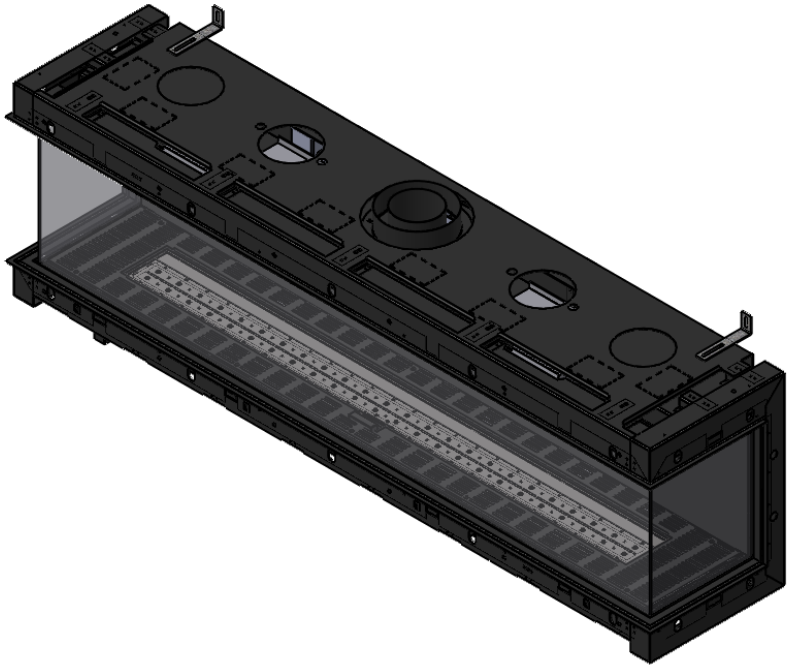

05/04/2016